VSA System Components
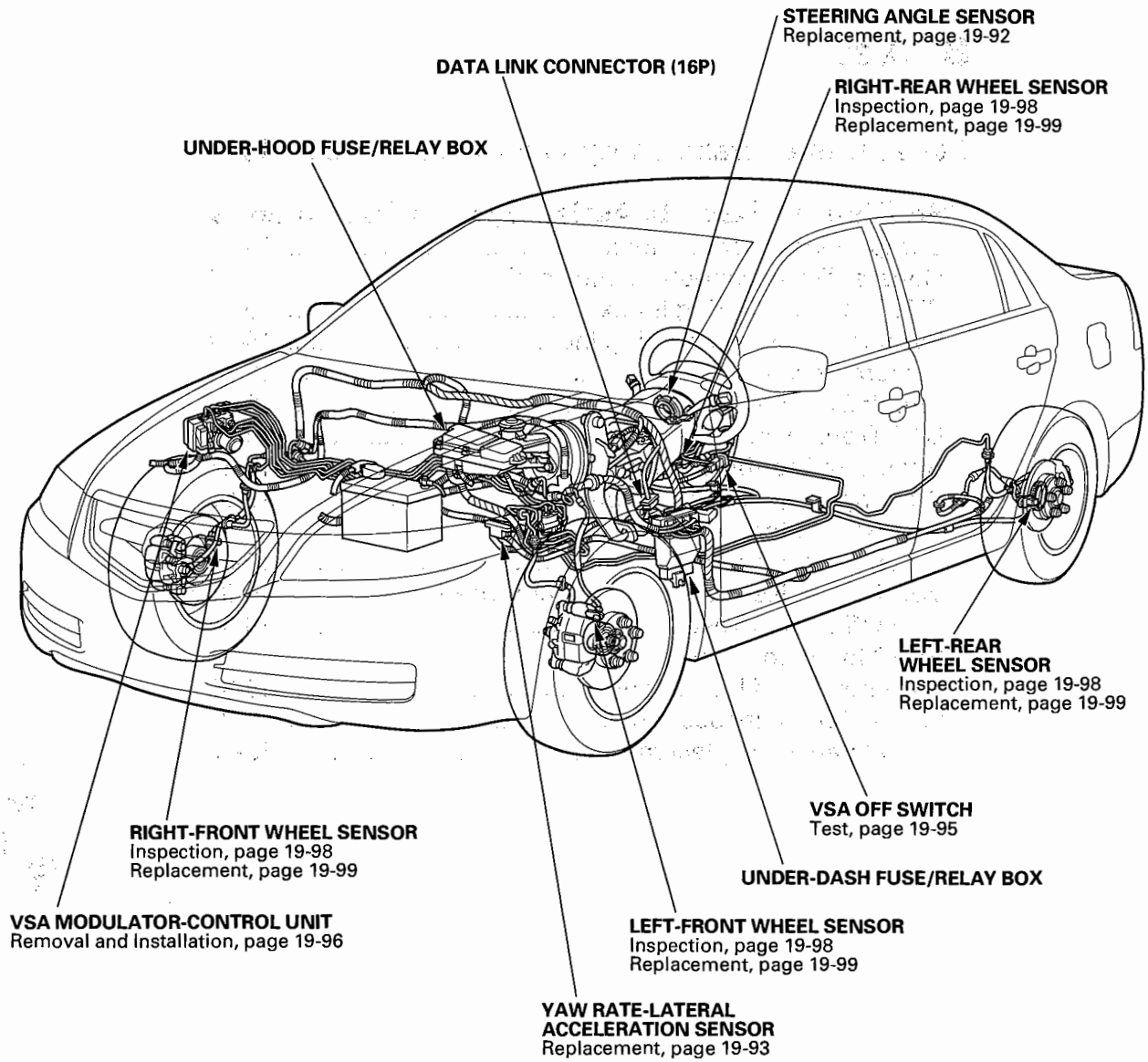
Component Location Index